COMBIPRESS “CB2”

Grupuri de presiune

Uz domestic
Uz agricol
Uz civil
Uz industrial

CB2 - MK

CB2 - 2CP

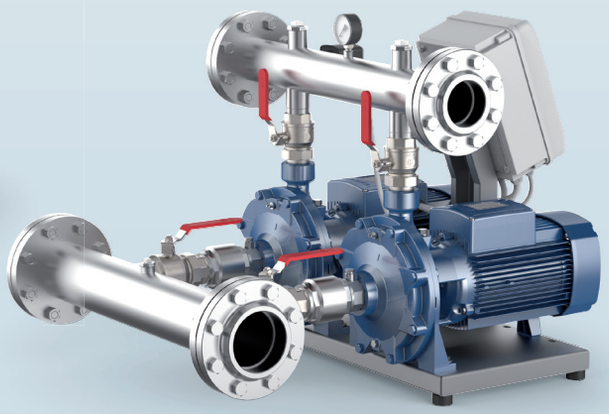

CB2 - 2CP

PRINCIPU DE FUNCTIONARE

COMBIPRESS-urile sunt grupuri de presiune compuse din doua pompe ansamblate intr- o unitate gata de instalare.
Grupurile sunt concepute astfel incat la orice cerere de crestere a presiunii din partea utilizatorului va porni automat una sau ambele pompe succesiv.
Functionarea pompelor este necesara pentru a satisface cererea de apa, reducand semnificativ consumul de energie.
Circuitele electronice prezente in tabloul electric alterneaza functionarea pompelor.

UTILIZARE

- Apa curata si lichide neagresive din punct de vedere chimic.
- Alimentarea cu apa: cresterea presiunii in blocuri, hoteluri , in instalatiile de tratare apei, ansamblurilor rezidentiale, scoli, spitale, campinguri, cazarme, etc
- Irigatii: terenuri, (fotbal, golf, etc), terenuri agricole, instalatii de producere a zapezii artificiale.

EXECUTII LA CERERE

EN 60335-1	**EN 60034-1**
IEC 60335-1	**IEC 60034-1**
CEI 61-150	**CEI 2-3**

CERTIFICARI

Companie cu sistem de management certificat DNV
ISO 9001: CALITATE
ISO 14001: MEDIU SI SIGURANTA

CARACTERISTICI DE CONSTRUCTIE

- **ELECTROPOMPELE sunt echipate cu colectori de admisie si refulare, robineti cu sfera si supape de retinere**
- **BAZA este** realizata in profil metalic
- **COMPONENTELE de comanda si control instalate pe colectoarele de refulare sunt compuse dintr-un manometru si doua presostate reglabile** (setarea din fabrica e facuta pe un camp de utilizare mediu al grupului raportat in tabelele de mai jos)
- **TABLOU ELECTRIC** dotat cu un intrerupator general de blocare a usii, circuit de comanda a presostatului in functie de tensiune, circuit electric pentru functionarea pompelor in alternanta, protectie termica si sistem anti-soc de pornire a electropompelor, (pentru a evita pornirile false in cazul unor consumuri mici de apa.)

CB2m: monofazic 230 V - 50 Hz.
CB2: trifazic 230/400 V - 50 Hz fino a 4 kW.
400/690 V - 50 Hz da 5.5 a 7.5 kW.

GARANTIE

2 ani conform conditiilor noastre generale de vanzare..

CARACTERISTICI

50 Hz **n= 2900 rpm** HS= 0 m

TIP	1~	3~	PUTERE (P2) kW	HP	Q* m³/h / l/min	0 / **0**	1.2 / **20**	2.4 / **40**	4.8 / **80**	7.2 / **120**	9.6 / **160**	12 / **200**	14.4 / **240**	16.8 / **280**	19.2 / **320**	21.6 / **360**
CB2 - MK 3/3-N	●	●	2x0.75	2 x 1	H metri	52	50	49	45	38	28					
CB2 - MK 3/4-N	●	●	2x1.1	2 x 1.5		69.5	67	65.5	60	50.5	38					
CB2 - MK 3/5-N	●	●	2x1.1	2 x 1.5		87	83	82	75	63.5	47					
CB2 - MK 3/6-N	●	●	2x1.5	2 x 2		104	100	98	90	76	56					
CB2 - MK 5/4-N	●	●	2x1.1	2 x 1.5		56	–	55	52.5	48	41.5	32	20			
CB2 - MK 5/5-N	●	●	2x1.1	2 x 1.5		70	–	69	66	60	51.5	40	25			
CB2 - MK 5/6-N	●	●	2x1.5	2 x 2		84	–	83	79	72	62	48	30			
CB2 - MK 5/7-N		●	2x1.8	2 x 2.5		98	–	96	92.5	84	72.5	56	34			
CB2 - MK 5/8-N		●	2x2.2	2 x 3		112	–	110	105.5	96	82.5	64	40			
CB2 - MK 8/4-N	●	●	2x1.5	2 x 2		56	–	–	54	52	50	46	39	31.5	24	15
CB2 - MK 8/5-N		●	2x1.8	2 x 2.5		70	–	–	67.5	66	63	58	50	40	30	18
CB2 - MK 8/6-N		●	2x2.2	2 x 3		86	–	–	82	78	74	68	58	46.5	35	20

TIP	1~	3~	PUTERE (P2) kW	HP	Q* m³/h / l/min	0 / **0**	0.6 / **10**	1.2 / **20**	2.4 / **40**	3.6 / **60**	4.8 / **80**	7.2 / **120**	8.4 / **140**	9.6 / **160**	10.8 / **180**	12.0 / **200**	13.2 / **220**	14.4 / **240**	15.6 / **260**
CB2 - 4CP 100-C	●		2x0.75	2 x 1	H metri	50	50	49	47	45	42	37	34	30.5	26.5	22	17	11	5

TIP	1~	3~	PUTERE (P2) kW	HP	Q* m³/h / l/min	0 / **0**	2.4 / **40**	4.8 / **80**	7.2 / **120**	9.6 / **160**	12.0 / **200**	13.2 / **220**	14.4 / **240**	16.8 / **280**	19.2 / **320**	21.6 / **360**	24.0 / **400**	30.0 / **500**	36.0 / **600**	42.0 / **700**	48.0 / **800**
CB2 - 2CP 25/130N	●	●	2x0.75	2 x 1	H metri	42	39	34	28.5	22	15										
CB2 - 2CP 25/14B	●	●	2x1.1	2 x 1.5		54	52	47.5	41	33	22										
CB2 - 2CP 25/16C	●	●	2x1.1	2 x 1.5		47	46	44	40	35	30	27	24								
CB2 - 2CP 25/16B	●	●	2x1.5	2 x 2		58	56	54	51	47	43	40	37	30							
CB2 - 2CP 25/16A		●	2x2.2	2 x 3		68	67	64.5	62	58	54	51	48	41	32						
CB2 - 2CP 32/200C		●	2x3	2 x 4		70	–	66.5	65	63	60.5	59	58	55	52	49.5	46.5	36			
CB2 - 2CP 32/200B		●	2x4	2 x 5.5		85	–	81	79	77	75	74	72	69	66	62	58	49			
CB2 - 2CP 32/210B		●	2x5.5	2 x 7.5		94	–	94	93	91	89	87	86	83	79	75	70	56			
CB2 - 2CP 32/210A		●	2x7.5	2 x 10		112	–	111	110.5	110	108	107	106	102	99	94	89	74			
CB2 - 2CP 40/180C		●	2x4	2 x 5.5		64	–	–	–	–	62	61.3	60.5	59	57.5	56	54.5	49	43	35	
CB2 - 2CP 40/180B		●	2x5.5	2 x 7.5		76	–	–	–	–	73	72.5	72	71	70	69	67.5	64	59.5	54	46
CB2 - 2CP 40/180A		●	2x7.5	2 x 10		88	–	–	–	–	85	84.5	84	83	82	81	79.5	76	72	67	60

Q = Debit **H** = Inaltimea de pompare manometrica totala **HS** = Inaltimea de aspiratie

Toleranta curbelor de functionare conformEN ISO 9906 Grado 3B.

*** Indica debitul maxim a celor doua pompe in timpul functionarii ;** electropompele trifazice sunt echipate cu motoare de inalt randament **clasa IE2 cu P2=1.1 kW si clasa IE3 cu P2=1.5 kW (IEC 60034-30)**

COMBIPRESS “CB2”

DIMENSIUNI SI GREUTATI

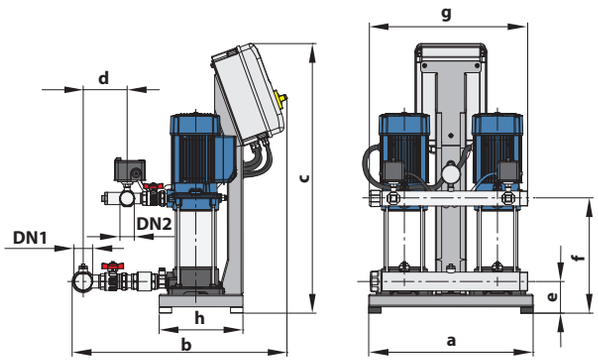

CB2-MK

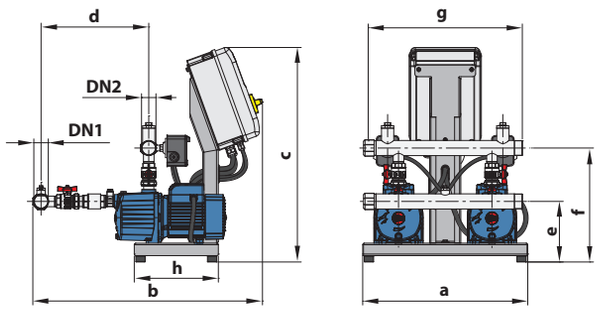

CB2-4CP

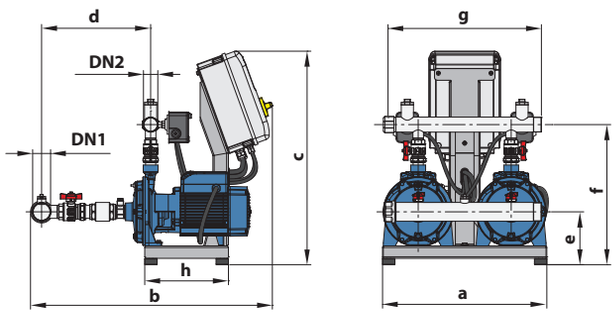

CB2 -2CP 25/ • CB2-2CP 32/

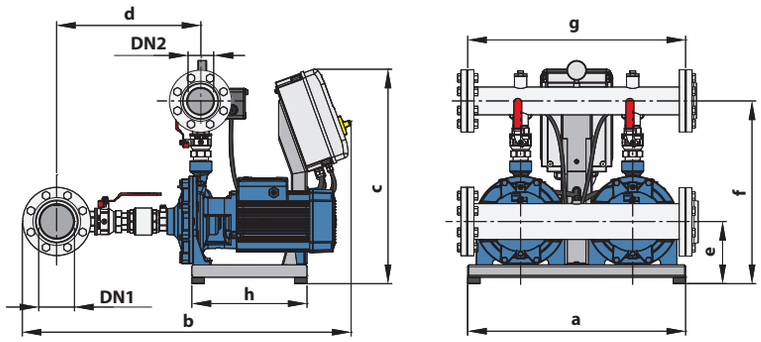

CB2-2CP 40/

TIP		RACORD		DIMENSIUNI mm								kg	
Monofazic	**Trifazic**	**DN1**	**DN2**	a	b	c	d	e	f	g	h	1~	3~
CB2 - MKm 3/3-N	CB2 - MK 3/3-N								251			**58.0**	**59.0**
CB2 - MKm 3/4-N	CB2 - MK 3/4-N								275			**59.0**	**59.0**
CB2 - MKm 3/5-N	CB2 - MK 3/5-N								299			**60.0**	**60.0**
CB2 - MKm 3/6-N	CB2 - MK 3/6-N								323			**66.0**	**64.0**
CB2 - MKm 5/4-N	CB2 - MK 5/4-N	**2”**	**1½”**	530	692	868	142	102	275	500	270	**59.0**	**59.0**
CB2 - MKm 5/5-N	CB2 - MK 5/5-N								299			**59.0**	**60.0**
CB2 - MKm 5/6-N	CB2 - MK 5/6-N								323			**65.0**	**63.0**
–	CB2 - MK 5/7-N								347			**–**	**66.0**
–	CB2 - MK 5/8-N								371			**–**	**67.0**
CB2 - MKm 8/4-N	CB2 - MK 8/4-N								261			**67.0**	**65.0**
–	CB2 - MK 8/5-N	**2½”**	**1½”**	530	737	868	178	102	285	500	270	**–**	**68.0**
–	CB2 - MK 8/6-N								309			**–**	**68.0**
CB2 - 4CPm100-C	–	**1½”**	**1½”**	530	737	688	346	194	366	500	270	**79.0**	**–**
CB2 - 2CPm 25/130N	CB2 - 2CP 25/130N	**1½”**	**1½”**	530	746	688	343	152	394	500	270	**52.5**	**51.0**
CB2 - 2CPm 25/14B	CB2 - 2CP 25/14B				771			153	417			**70.5**	**70.0**
CB2 - 2CPm 25/16C	CB2 - 2CP 25/16C	**2”**	**1½”**	530		688	352			500	270	**70.5**	**70.0**
CB2 - 2CPm 25/16B	CB2 - 2CP 25/16B				780			170	452			**79.5**	**79.0**
–	CB2 - 2CP 25/16A											**–**	**82.0**
–	CB2 - 2CP 32/200C				982		450	192	535			**–**	**112.0**
–	CB2 - 2CP 32/200B	**3”**	**2”**	700		688				700	370	**–**	**118.0**
–	CB2 - 2CP 32/210B				987		454	199	565			**–**	**149.0**
–	CB2 - 2CP 32/210A											**–**	**156.0**
–	CB2 - 2CP 40/180C	**4”**	**3”**	700	1056	688	463	199	587	700	370	**–**	**168.0**
–	CB2 - 2CP 40/180B	DN **100**	DN **80**									**–**	**178.0**
–	CB2 - 2CP 40/180A											**–**	**188.0**